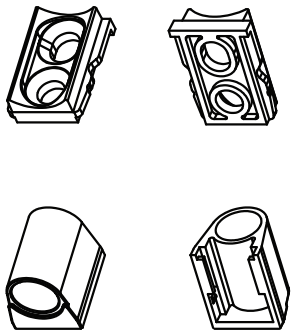

Description

Material:	ABS, PC
Diameter:	Ø 8 mm
Connector housing	
Size:	16 x 12.4 x 13 mm
Mounting Base	
Size:	14.5 x 10.2 x 4.6 mm
Usage:	Wired sensors 855/856/857/858/865 optional

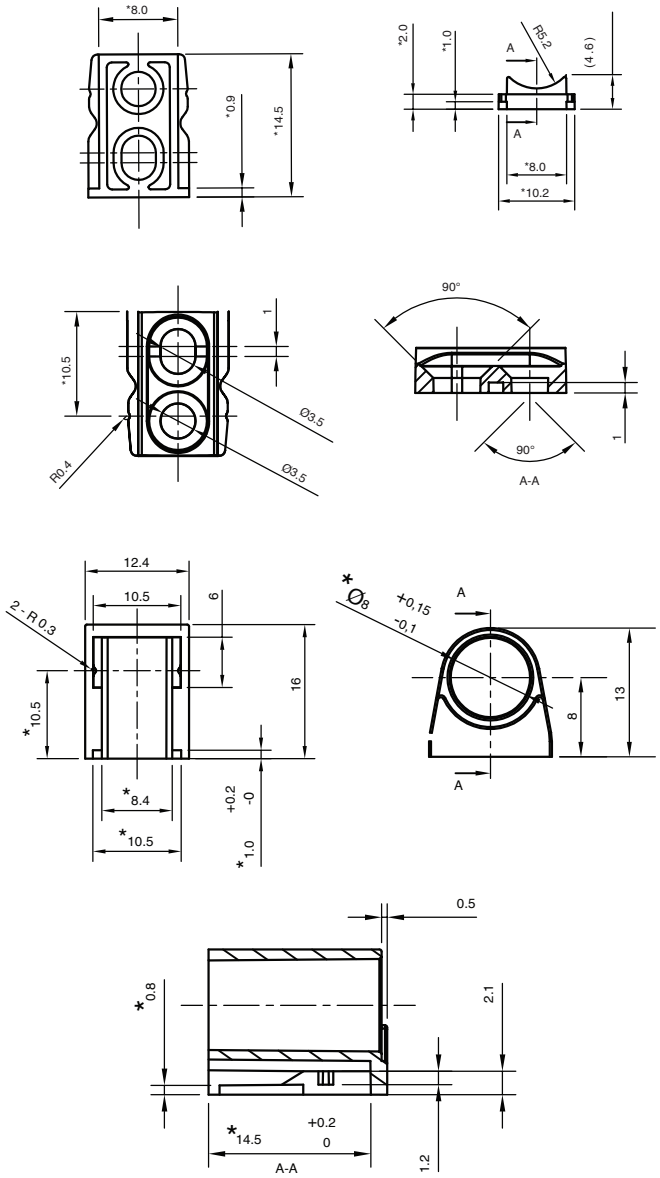

Item ID No.

Finish/Colour	Cat. No.
Black	**BG-897.08.040**